Rotary Compressor Specification

—QXR-30E

----R22

For Air Conditioner

1. Introduction

The compressor designed by china national standard GB/T15765-1995, GB4706.1-1998, GB4706.17-2004 and International standard IEC 60335-2-34:2002. Apply to the R22 refrigerant , ambient temperature range -5~43℃, condensing temperature range 45~65℃ air conditioner & similar application equipment.

2. Normal specification

Application	AC Conditioner and heat pump
Compressor Type	Hermetic Rotary Motor Compressor
Refrigerant	R22
Oil Grade • Oil Charge	SUNISO 4GS • 600ml
Paint	Semi-Glossiness Black painting
Weight（including oil）	17.5 k g
Displacement	30.7 cm^3
Suction Tube I.D.	φ12.8 mm
Discharge Tube I.D.	φ9.7 mm
Nominal Capacity	5200 W
Power Input	1800 W
RLA	8.6 A
COP	2.89 W/W
Noise (SPL)	≤67dB

Rated Condition

Evaporating Temp.	Condensing Temp.	ReturnGasTemp.	LiquidTemp.	Ambient Temp.
7.2	54.4	35	46.1	35

3. Motor Data

Motor Type	2 Pole Induction (P S C)
Power Supply	220V~50Hz
Insulation Level	B
Winding Resistance（25℃）	Main 1.68Ω Sub 3.76Ω
LRA (220V)	39 A
Startup Voltage Range	187V~242V
Running Voltage Range	198V~242V
Run Capacitor	50uF

4. Safe Test Data

Airproof Test Pressure	High/Low：2.9Mpa/1.6Mpa
Strength Test Pressure	High/Low：10.5Mpa/2.2Mpa
Insulating Resistance at Cold State	≥50MΩ
Electric Strength at Cold State	5mA-AC1800V-1 S. /Passed
Moisture Content	≤200mg
Impurity Solids Content	≤100mg
Grounding resistance	≤0.1Ω

5. Extreme Limit of Use

ITEM	NORMAL	MAXIMUM
Discharge Pressure	≤2.06Mpa	2.6Mpa
Suction Pressure.	0.29~0.59Mpa	0.1~0.69Mpa
Winding Temp.	≤100℃	125℃
Discharge Tube Temp.	≤100℃	115℃

6. Wiring Diagram.

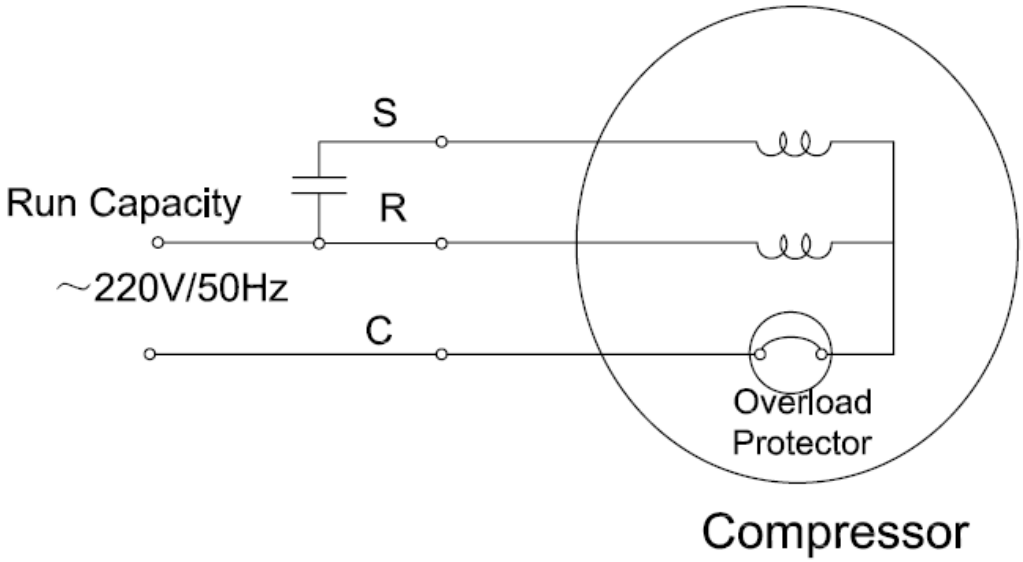

7. External View &Dimensions
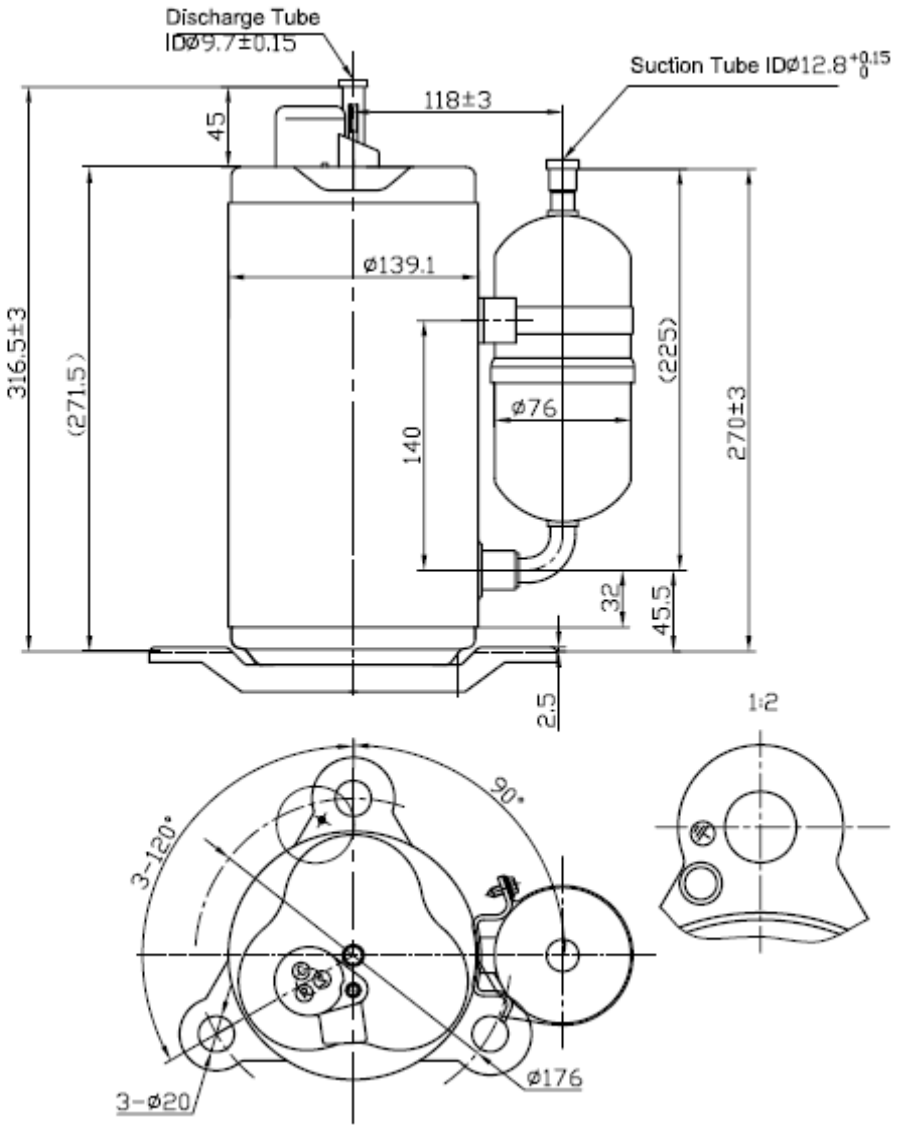
mm